MAYTONI
DECORATIVE LIGHTING

Instruction

MOD073PL-L16B3K

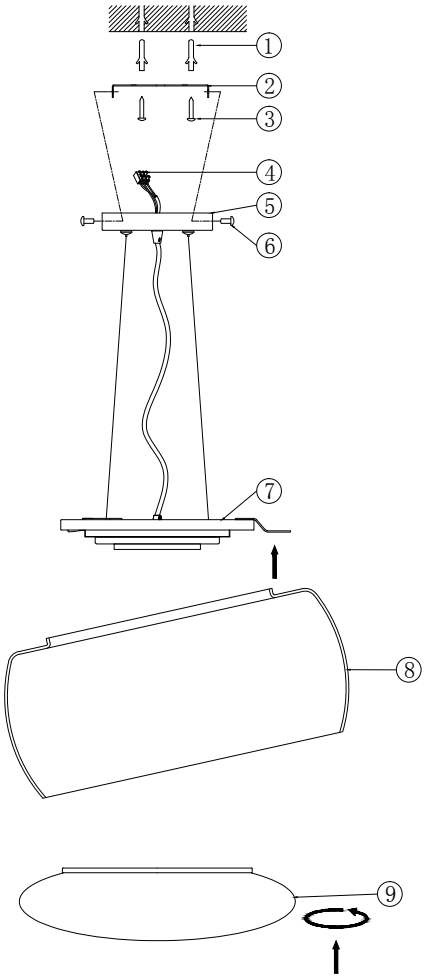

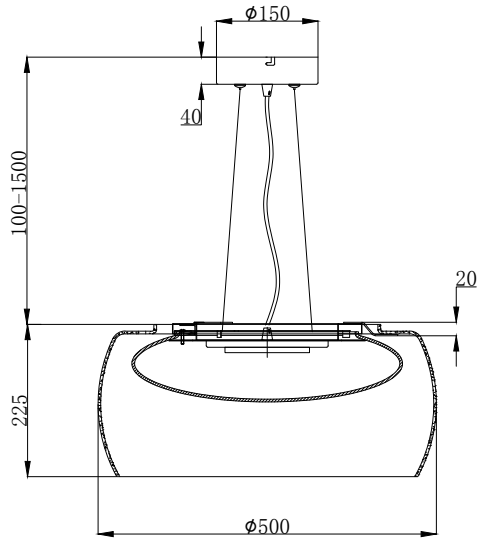

LED

MAX 16W
500 Lumen

Model: MOD073PL-L16B3K
Collection: Modern
Series: Solen

Pendant Lamps