MAYTONI
DECORATIVE LIGHTING

Instruction

MOD221FL-01N

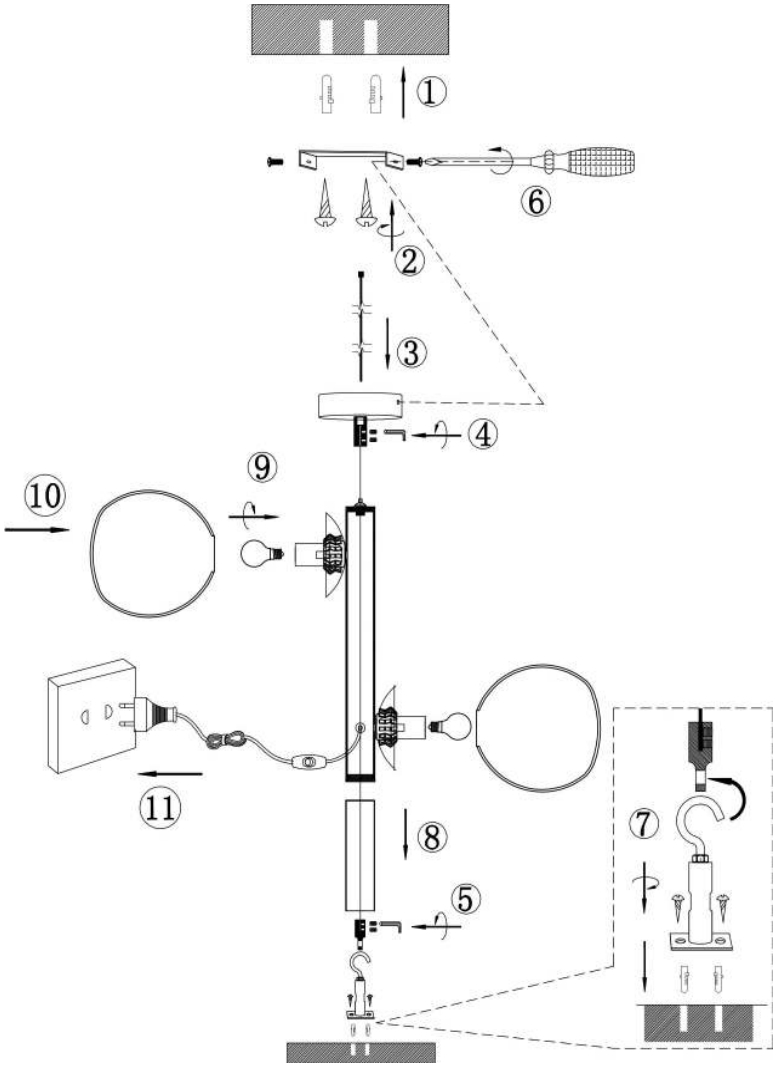

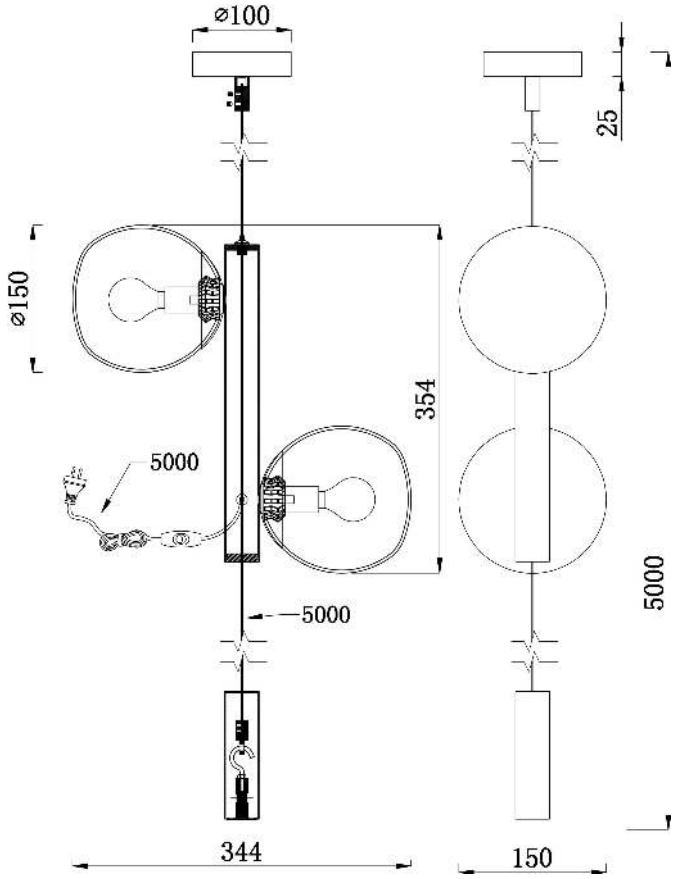

2xE14 40W

Model: MOD221FL-01N

Collection: Modern

Floor Lamps